VUE COLLECTION™
Typical Window Installation Using an Integral Nailing Flange

Thank you for choosing Weather Shield Windows and Doors. These instructions will cover a typical installation of a window with an integral nailing fin.

NOTES FOR INSTALLER

These instructions may not be right for all installations due to specific building conditions. Consult your building code official for local codes and regulations. Local building code requirements supersede recommended installation instructions.

Important: Please read completely before you begin.

WARNING	WARNING
Windows can be extremely heavy. To avoid injury, use appropriate lifting techniques and an adequate number of people to carry and install the product. Failure to do so can result in injury or damage to the product or property.	Always wear appropriate gloves and eye protection for all procedures. Follow manufactures' instructions for hand and power tools.
WARNING	**WARNING**
This product may contain chemicals known to the state of California to cause cancer, birth defects, or other reproductive harm. For more information go to **www.P65Warnings.ca.gov**	Special care must be taken with units with protective glass film applied. **DO NOT** remove protective film near flammable materials. The static charge created when removing the film can ignite flammable materials or cause a shock. **DO NOT** place suction grips over film seams. Suction grips will not hold if placed over the film seam to lift heavy glass or panels.

Tools and Supplies Needed

Tools
Measuring tape
Level (4' minimum recommended)
Square
Hammer
Power driver
Utility knife
J-roller
Caulk gun
Pry bar

Installation Materials (not included)
Flashing tape (4" Minimum)
Formable self-adhering sill flashing (or rigid pan)
#8 x 2" flat head screws (or 2" Galvanized Roofing Nails)
High-quality sealant
Shims (moisture-proof)
Low-expanding foam

1315122
2021 8-31

WEATHER SHIELD.
WINDOWS & DOORS

VUE COLLECTION™
Typical Window Installation Using an Integral Nailing Flange

1 ROUGH OPENING VARIFICATION

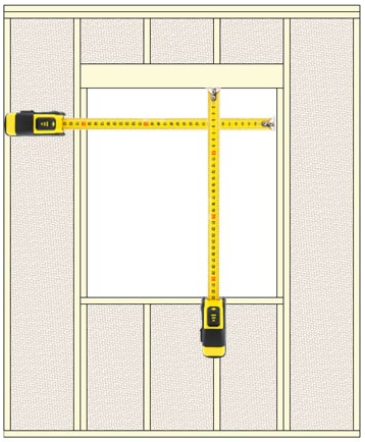

INTERIOR

Measure the rough opening and make sure it is ¾” larger than the window in width and height.

2 ROUGH OPENING VARIFICATION

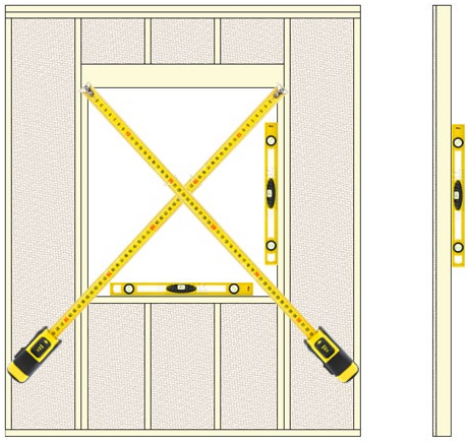

INTERIOR

Check the opening is plumb, level, and square. Diagonal measurements must be within 1/8”.
NOTE: If conditions in steps 1 & 2 are not met, make corrections before proceeding.

3 CUTTING WEATHER RESISTANT BARRIER

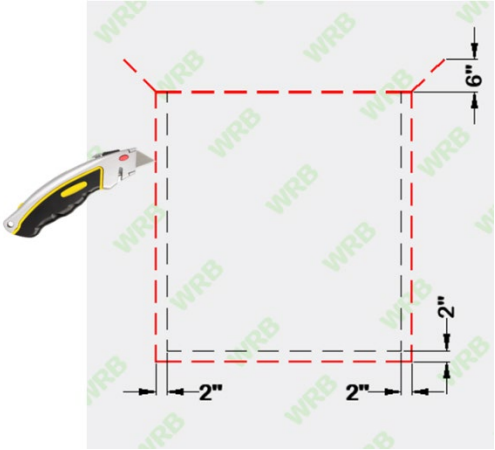

EXTERIOR

Cut the house wrap at the sill 2” below the rough opening and 2” past the jambs on each side. Cut the house wrap at the head even with the framing and diagonally past the jambs 6” to create a flap.

4 ROUGH OPENING VARIFICATION

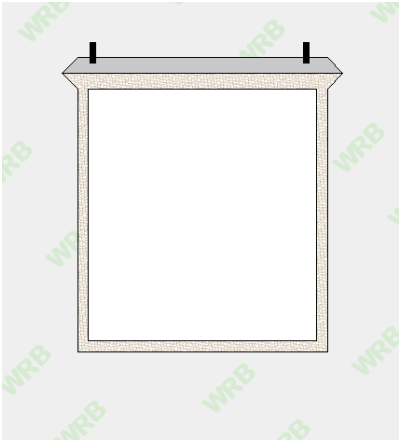

EXTERIOR

Fold the flap up and temporarily tape it above the opening.
NOTE: This method will allow the nailing fin to mount directly to the sheathing. Check with the building wrap manufacturer to verify this does not void their warranty.

1315122
2021 8-31

WEATHER SHIELD.
WINDOWS & DOORS

5 APPLY SILL FLASHING

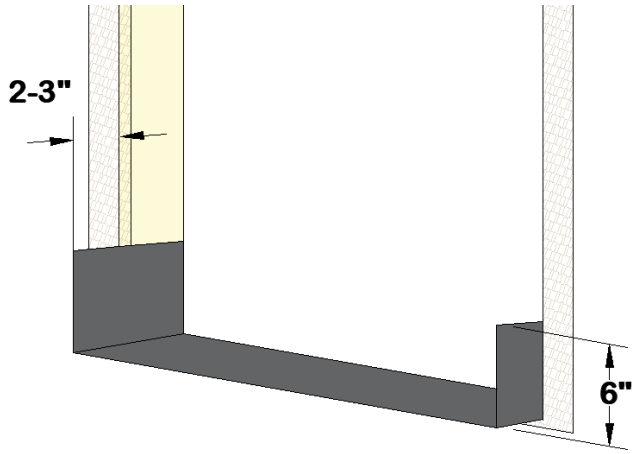

EXTERIOR

Cut flexible sill flashing material so it is long enough to extend up a minimum of 6” up each side jamb (R.O. + 12” min.).

6 APPLY SILL FLASHING

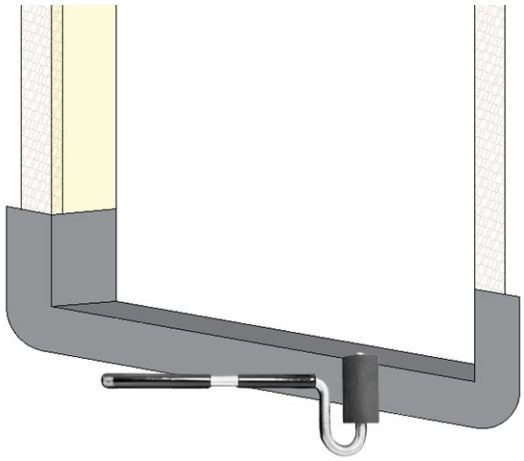

EXTERIOR

Pull the backing from the flashing and apply to the sill allowing the flashing to extend up the side jambs 6”. Fold the flashing over the sheathing and WRB. Roll smooth with J-roller to remove air pockets and promote adhesion.

7 PREFIT THE WINDOW

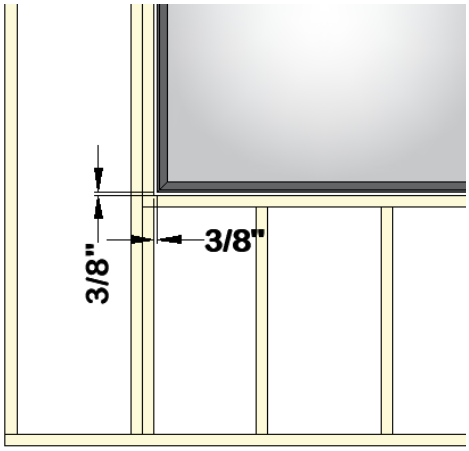

INTERIOR

Dry fit the window to ensure the window can fit the opening with a minimum of 3/8” clearance around the window.

8 SHIM JAMBS AT SILL

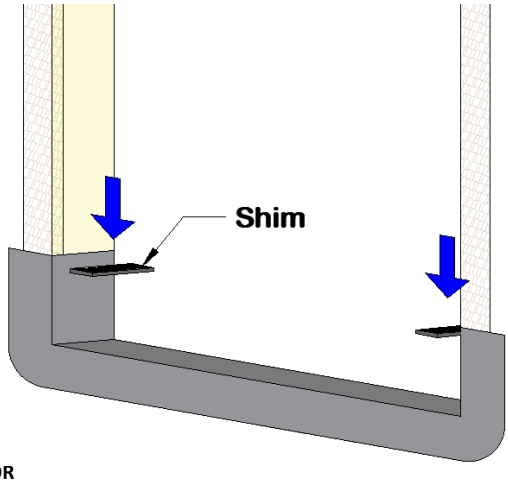

EXTERIOR

Place shims under each jamb at the sill.

For mulled units, shim under both jambs at the mullion in addition to the outer jambs.

9 APPLY SEALANT

BACKSIDE OF WINDOW FRAME

Apply a continuous 3/8” bead of sealant to the jamb and head nailing fin. Keep sealant in line with the pre-punched nailing fin holes.

Apply an intermitted 3/8” bead of sealant to the sill nailing fin to allow for incidental water drainage.

10 INSERT WINDOW

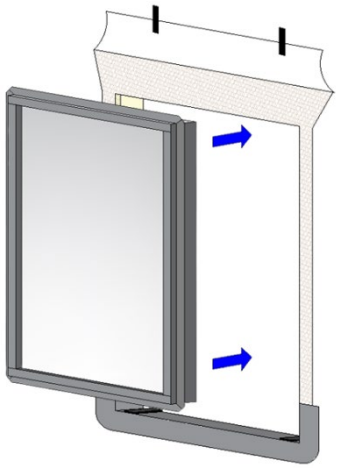

EXTERIOR

Immediately after applying sealant, lift and center window in the opening from the exterior setting the sill in first and tipping the window into place.

11 TEMPORARILY SECURE WINDOW

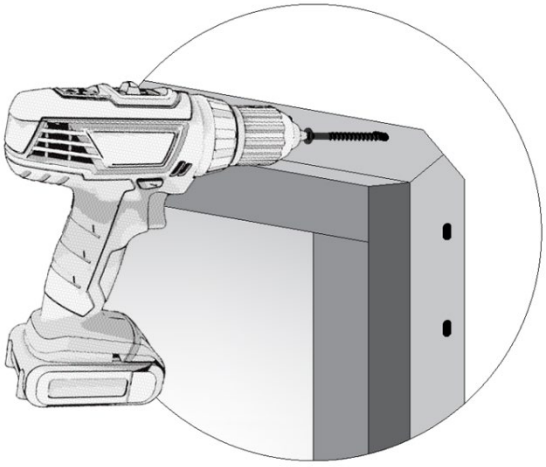

EXTERIOR

Secure one side top corner with either a rust-proof roofing nail or a #8 steel screw. Fasteners must be long enough to penetrate the framing material by at least 1-1/2”.

12 SHIM JAMBS

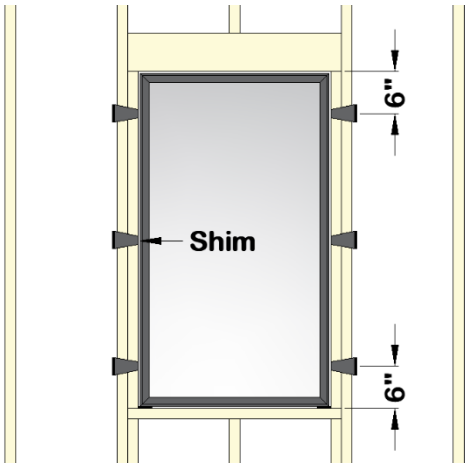

INTERIOR

Add shims 4”-6” in from the corners at the side jambs and 16” intervals on the center as needed to ensure the window is positioned in the opening plumb, level, and square.

13 VERIFY PLUMB, LEVEL, AND SQUARE

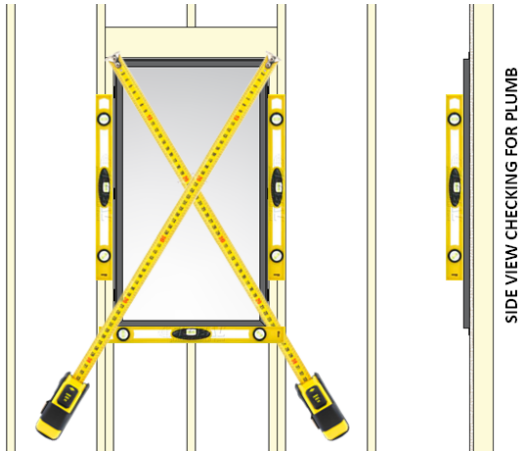

INTERIOR

Check the unit is plumb, level, and square. Diagonal measurements must be within 1/8”. Adjust shims as needed.

14 SECURE WINDOW

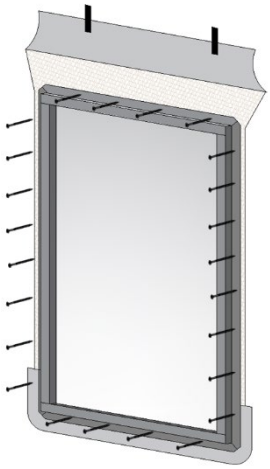

EXTERIOR

When the window is plumb, level, and square, continue fastening through the nailing fin holes. Place fasteners 4” from each corner and spaced every 4”- 8” on center.

15 FLASHING THE INSTALLATION

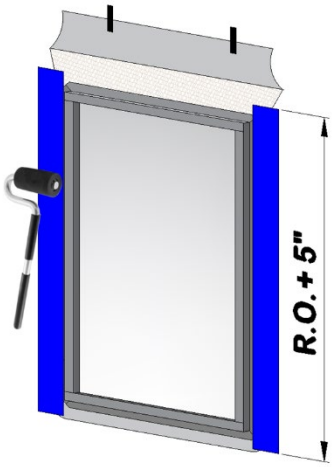

EXTERIOR

Cut two lengths of 4” wide flashing tape equal to the rough opening jamb height plus 5 inches. Remove the backing of the tape and apply over the nailing fin and the house wrap keeping centered on the side jamb. Roll smooth with J-roller to remove air pockets and promote adhesion.

16 FLASHING THE INSTALLATION

EXTERIOR

Cut one piece of 4” wide flashing tape equal to the rough opening width of the window plus 10”. Remove the backing of the tape and apply over the head nailing fin extending past the jamb flashing by at least one inch. Roll smooth with J-roller to remove air pockets and promote adhesion.

17 FLASHING THE INSTALLATION

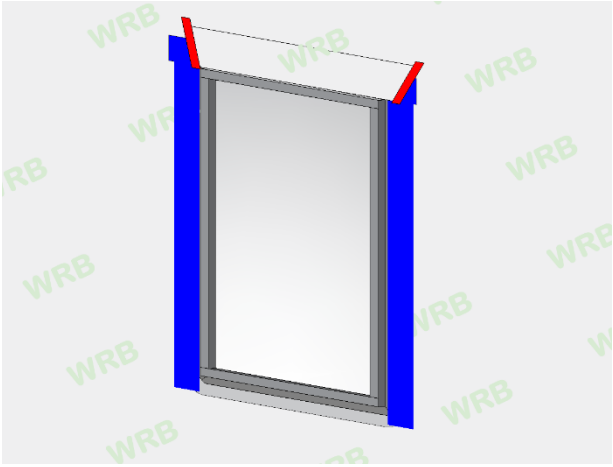

EXTERIOR

Replace the flap created during the preparation of the weather-resistive barrier and tape the seams with WRB tape or window flashing tape.

18 INSULATE AND SEALING

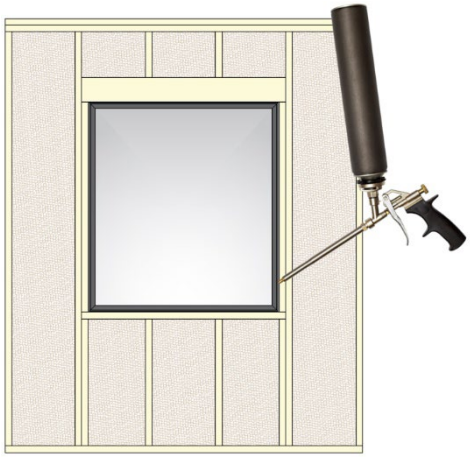

INTERIOR

Insulate and seal the gap between the rough opening and the window frame using either loose-fill fiberglass insulation or low-expansion polyurethane foam. If a sill pan is not being used, add a back dam of silicone to the sill rough opening gap and continue up the side 3”.

NOTE: Only fill the void half the depth of the jamb with foam to allow for expansion.

CASEMENT HARDWARE ADJUSTMENTS

1 CASEMENT HARDWARE ADJUSTMENTS

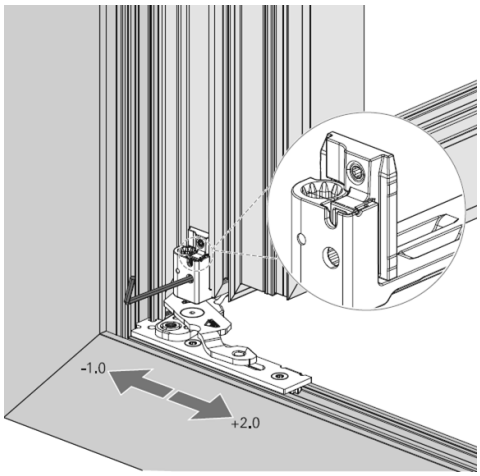

LATERAL ADJUSTMENT (Bottom Hinge)

1. Open window 90 degrees.
2. Using a 4mm hex key, adjust the sash until the reveal to the frame is even on both sides.

2 CASEMENT HARDWARE ADJUSTMENTS

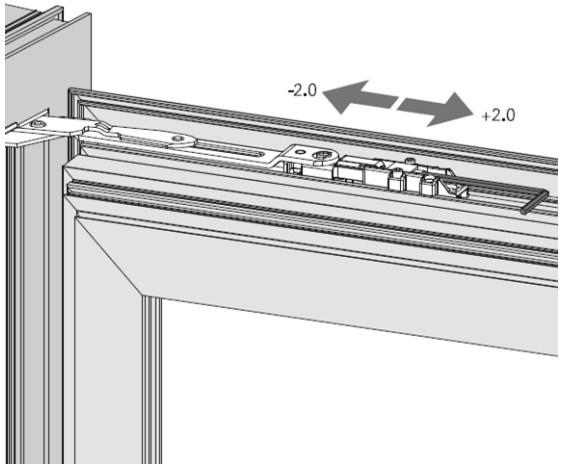

LATERAL ADJUSTMENT (Top Hinge)

1. Open window 90 degrees.
2. Using a 4mm hex key, adjust the sash until the reveal to the frame is even on both sides.
3.

3 CASEMENT HARDWARE ADJUSTMENTS

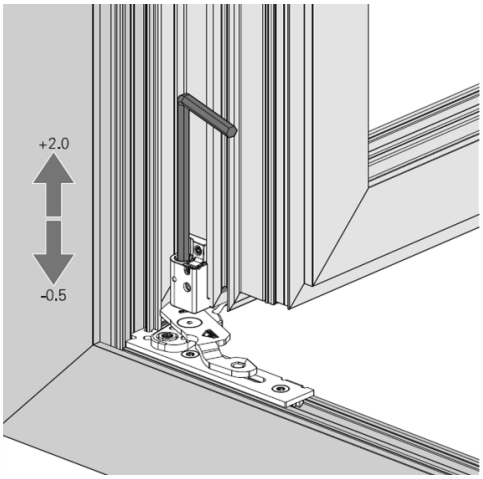

HEIGHT ADJUSTMENT (Bottom Hinge)

1. Open window 90 degrees.
2. Using a 4mm hex key, adjust the sash until the reveal to the frame is even.

4 CASEMENT HARDWARE ADJUSTMENTS

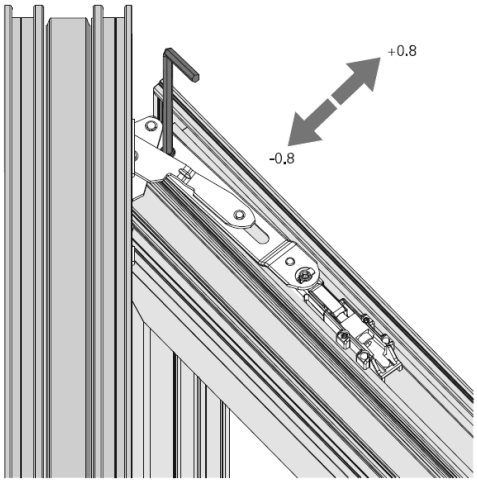

GASKET COMPRESSION (Top Hinge)

3. Open window to about 30 degrees.
4. Using a 4mm hex key, adjust the sash until it compresses the perimeter gasket when locked.

CLEANING PRODUCT

Vinyl, aluminum, steel, and fiberglass may be cleaned with mild soap and water. Hard to remove stains and mineral deposits may be removed with mineral spirits. Factory-applied painted surfaces can be cleaned with mild household detergents and water.

- Do NOT clean any surface with gasoline, diesel fuel, solvent-based, or petroleum-based products.
- Do NOT use abrasive materials or strongly acidic solutions against vinyl, aluminum, glass, steel, fiberglass, or factory-applied finishes.
- Do NOT scrape or use tools that might damage the surface.
- Do NOT paint vinyl or aluminum surfaces.
- Do NOT paint or stain the weatherstrip
- Do NOT use mastic-type tapes such as Duct Tape®.

WARRANTY

For Warranty information please refer to the Weather Shield website or use your phone to scan the QR code.

Warranty

CASEMENT SASH ADJUSTMENT

For detailed instructions on how to adjust the sash for optimum performance use your phone to scan the QR code.

Sash Adjustment