Weather Shield™

VUE Collection

Multi-Slide Doors

CROSS SECTION DETAILS

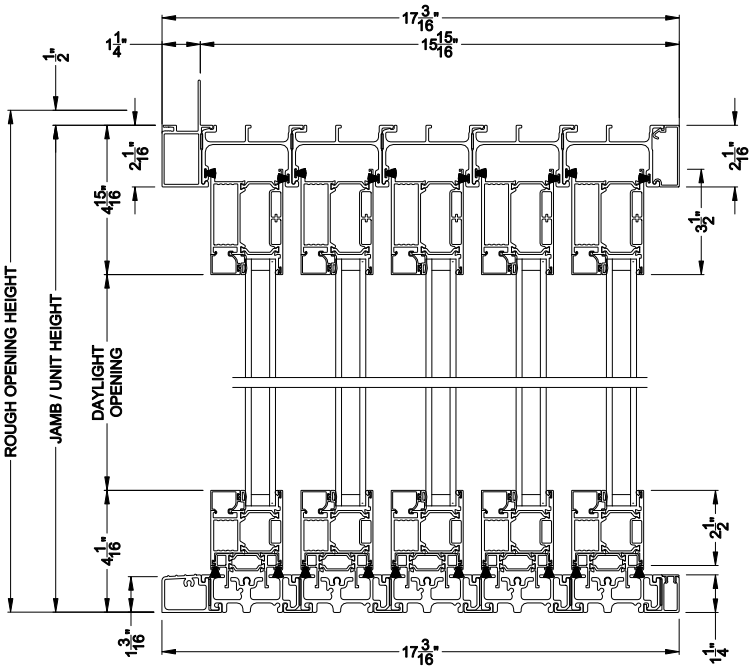

VUE COLLECTION MULTI-SLIDE PATIO DOOR (4701)

Vertical Section - Standard Sill - 5 or Bi-parting 10 Panel Door

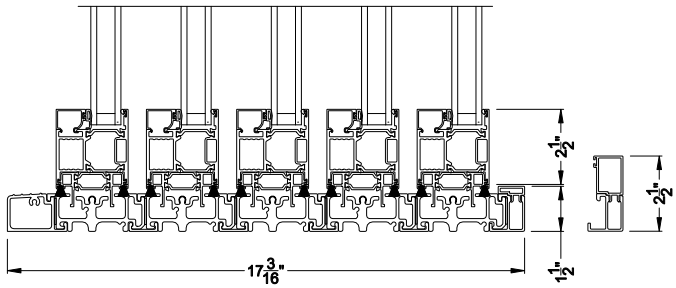

VUE COLLECTION MULTI-SLIDE PATIO DOOR (4701)

Vertical Section - with Sill Riser - 5 or Bi-parting 10 Panel Door

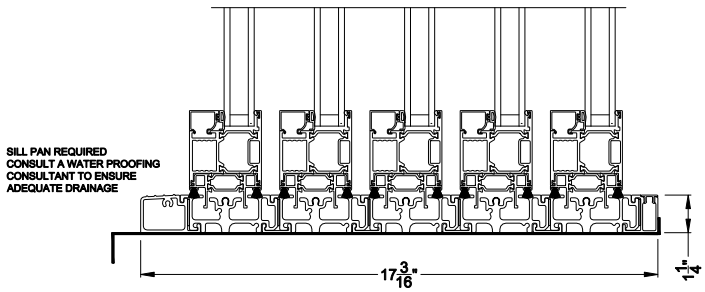

VUE COLLECTION MULTI-SLIDE PATIO DOOR (4701)

Vertical Section - with sill pan

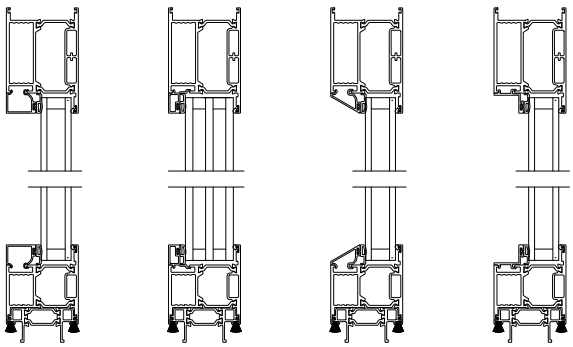

Square Bead | ES Glass Square Bead | Beveled Bead | Narrow Bead

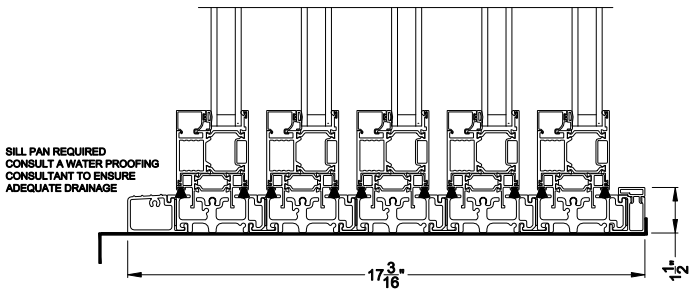

VUE COLLECTION MULTI-SLIDE PATIO DOOR (4701)

Vertical Section - with sill pan

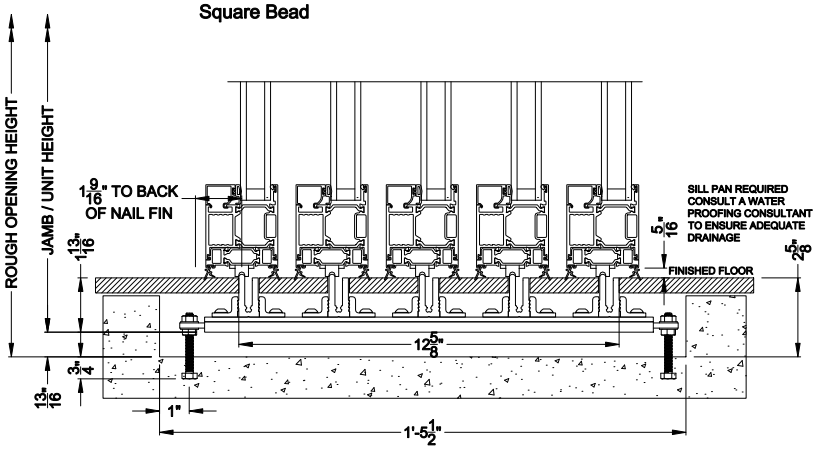

VUE COLLECTION MULTI-SLIDE PATIO DOOR (4701)

Vertical Section - with T-track sill - 5 or Bi-parting 10 Panel Door

Note: All dimensions are approximate. Weather Shield reserves the right to change specifications without notice.

Weather Shield™

VUE Collection

Multi-Slide Doors

CROSS SECTION DETAILS

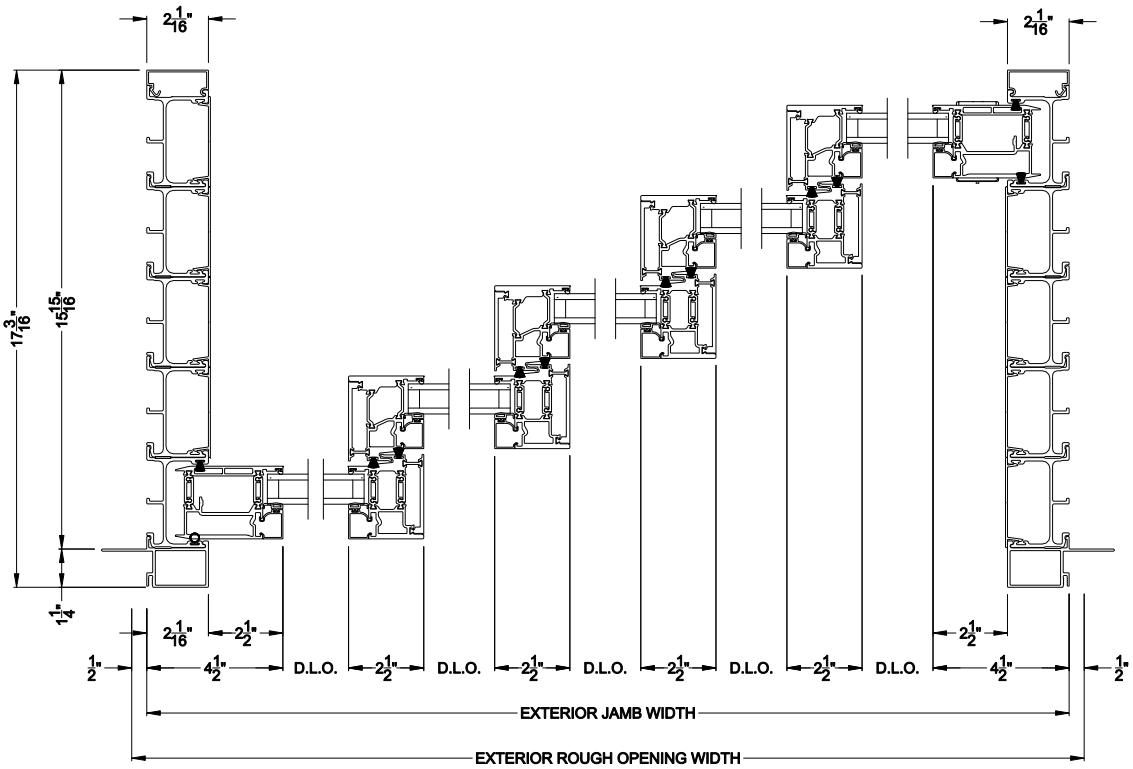

VUE COLLECTION MULTI-SLIDE PATIO DOOR (4701)

Horizontal Section - 5 Panel Door

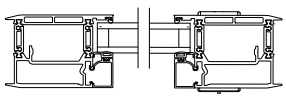

Square Bead

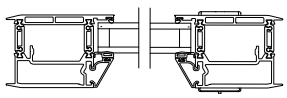

Beveled Bead

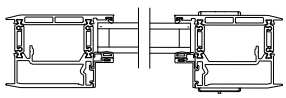

Narrow Bead

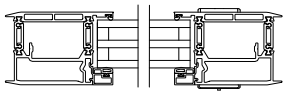

ES Glass Square Bead

Note: All dimensions are approximate. Weather Shield reserves the right to change specifications without notice.

Weather Shield™

VUE Collection

Multi-Slide Doors

CROSS SECTION DETAILS

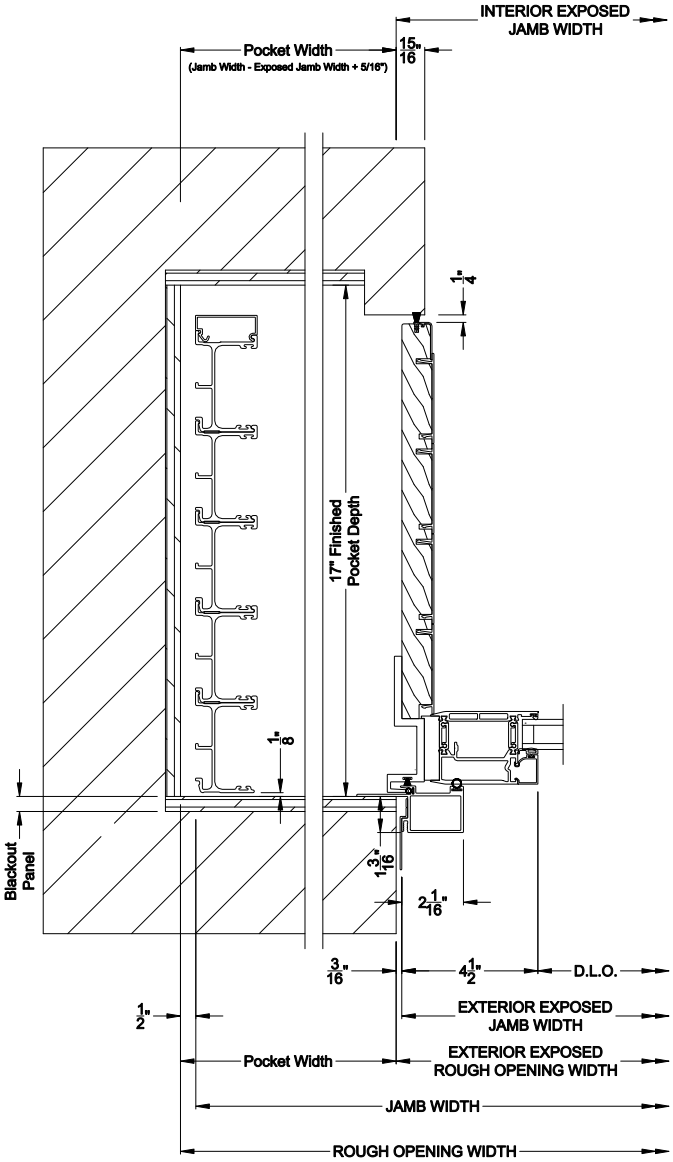

VUE COLLECTION MULTI-SLIDE PATIO DOOR (4701)

Horizontal Pocket Section - 5 or Bi-parting 10 Panel Door

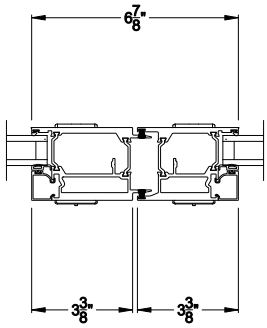

VUE COLLECTION MULTI-SLIDE PATIO DOOR (4701)

Horizontal Section - Bi-parting stiles

Note: All dimensions are approximate. Weather Shield reserves the right to change specifications without notice.

Weather Shield™

VUE Collection

Multi-Slide Doors

CROSS SECTION DETAILS

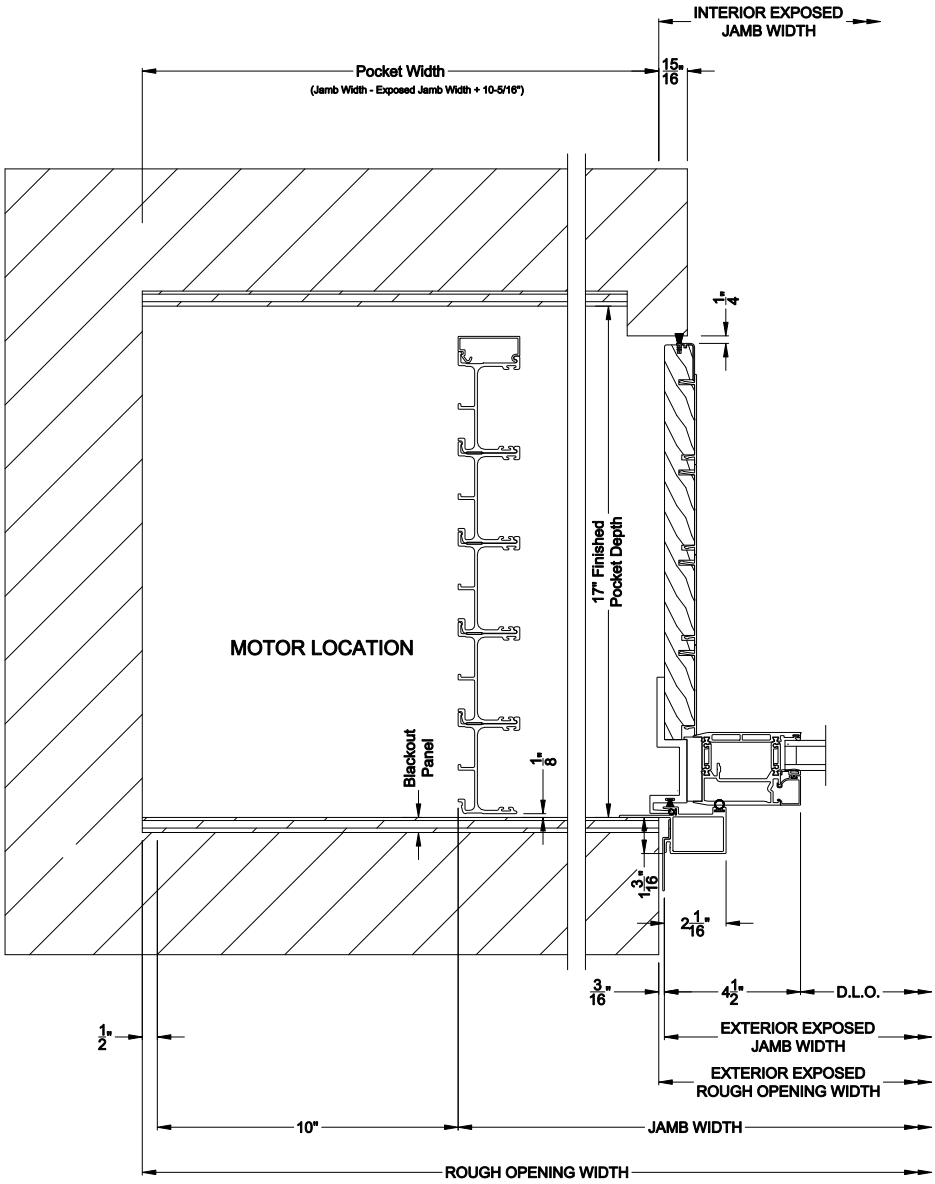

VUE COLLECTION MULTI-SLIDE PATIO DOOR (4701)

Horizontal Motorized Pocket Section - 5 or Bi-parting 10 Panel Door

Note: All dimensions are approximate. Weather Shield reserves the right to change specifications without notice.

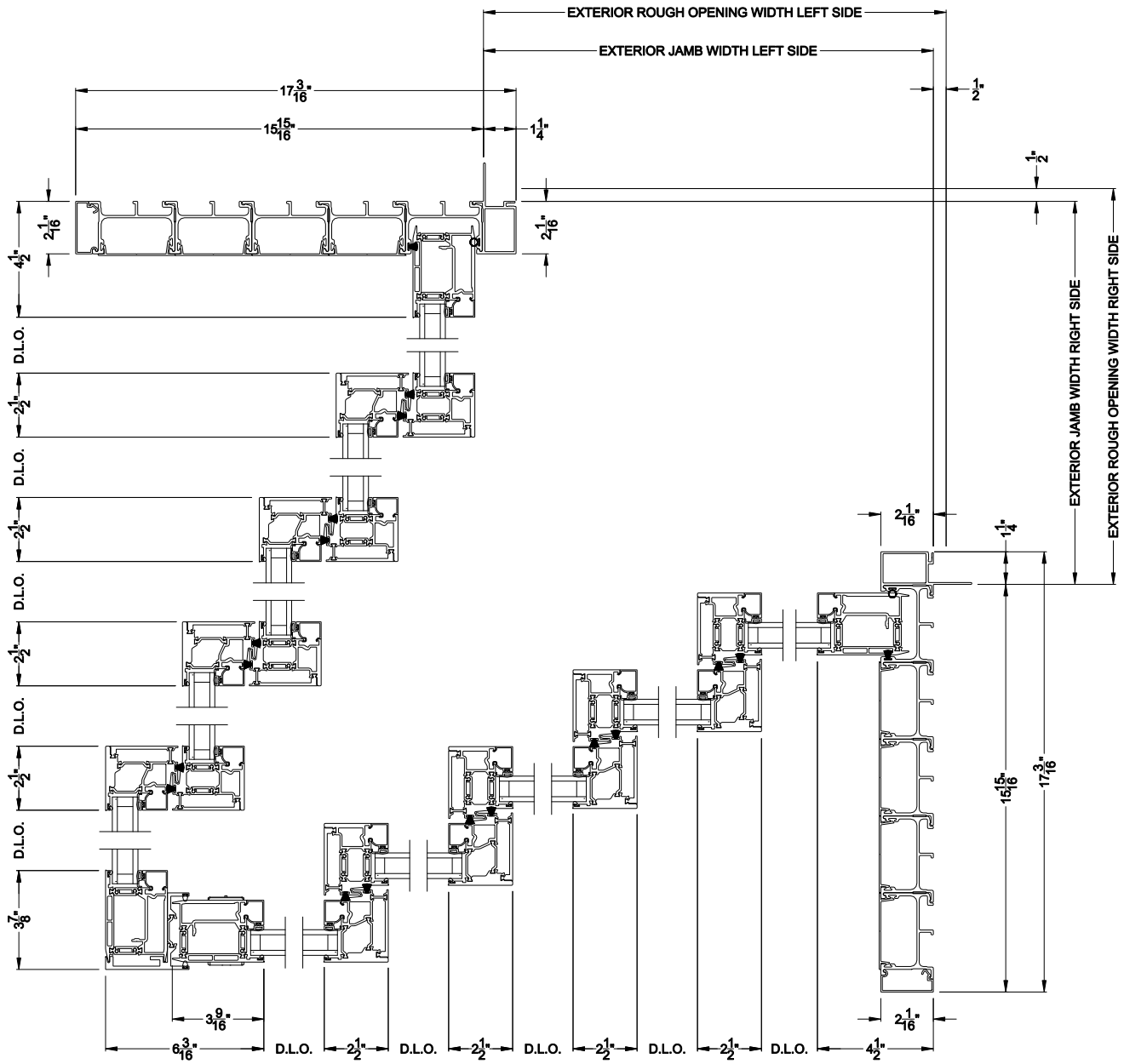

VUE COLLECTION MULTI-SLIDE PATIO DOOR (4701)
Horizontal Section - 5L5R Panel Inside Corner Door

Note: All dimensions are approximate. Weather Shield reserves the right to change specifications without notice.

Weather Shield™

VUE Collection

Multi-Slide Doors

CROSS SECTION DETAILS

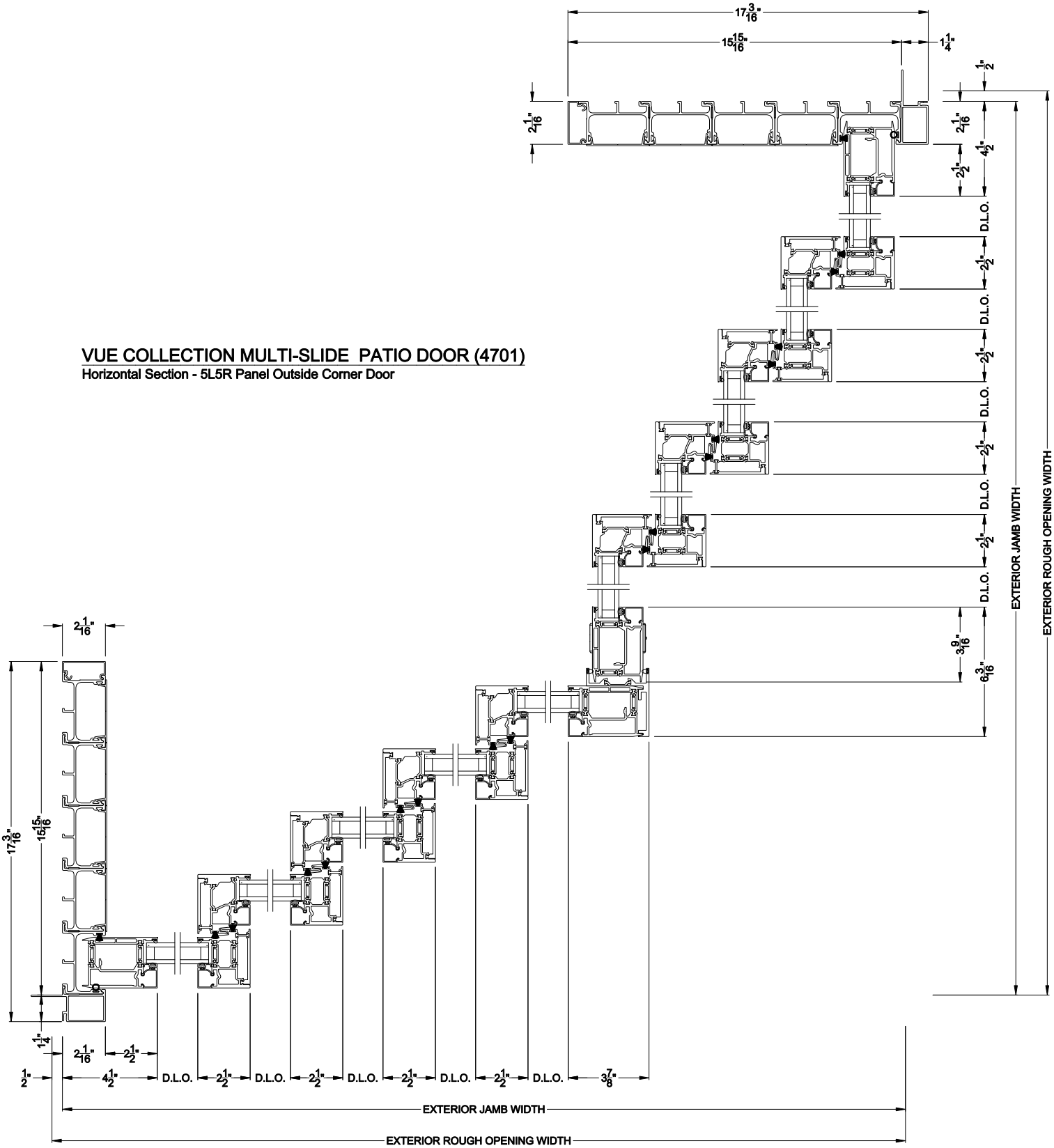

VUE COLLECTION MULTI-SLIDE PATIO DOOR (4701)

Horizontal Section - 5L5R Panel Outside Corner Door

Note: All dimensions are approximate. Weather Shield reserves the right to change specifications without notice.